QuOmni LTE MIMO 2x2 Nf

Omnidirectional multiband LTE MIMO 2x2 antenna

QuOmni LTE omnidirectional MIMO 2x2 LTE outdoor antenna operates with vertical polarization and is designed for LTE/3G/2G connections. It supports various popular LTE bands (such as 3, 7, 20) across frequencies ranging from 694 MHz to 2700 MHz.
This versatile antenna can be mounted on either on pole or wall. It can be used as an outdoor client antenna, or it can be installed on mobile platforms like trains, buses, trucks, yachts, and boats to enable LTE/3G internet reception.
It is fully compatible with a range of Teltonika products, including the RUT240, RUT900, RUT950, RUT955, RUTX09, RUTX11, as well as other MIMO 2x2 LTE/3G/2G modems and routers.

4G LTE | 2x2 MIMO | 694-2700MHz | 4 dBi | OMNI DIRECTIONAL | IP 67 | -40° TO +80°

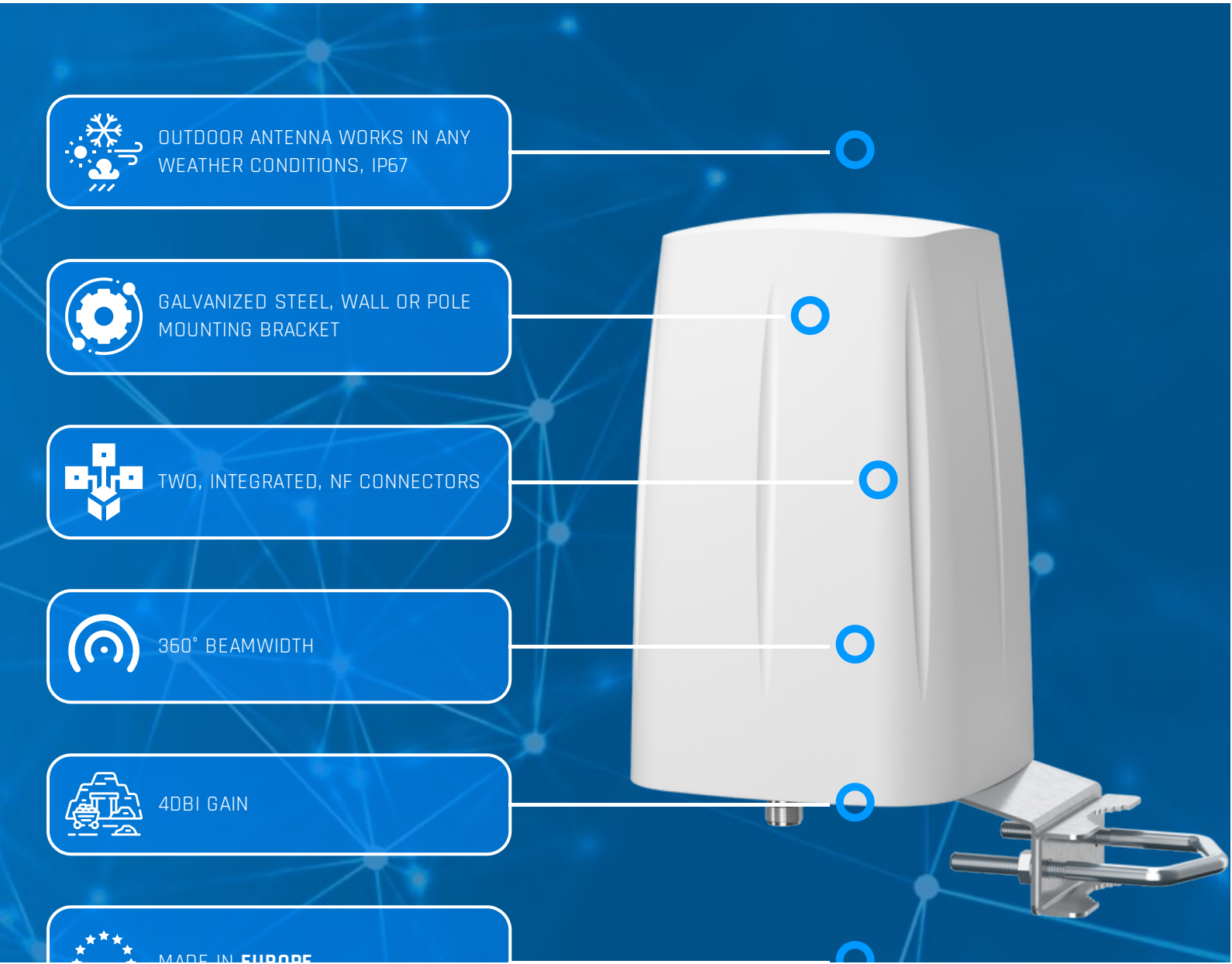

LTE ANTENNA SPECIFICATION

FREQUENCY	694 - 960 MHz 1.7 - 2.2 GHz 2.2 - 2.7 GHz
GAIN	694 - 960 MHz : 2 dBi 1.7 - 2.2 GHz : 2 dBi 2.2 - 2.7 GHz : 4 dBi
SUPPORTED LTE/5G BANDS	1, 2, 3, 4, 5, 6, 7, 8, 9, 10, 12, 13, 14, 17, 18, 19, 20, 23, 25, 26, 27, 28, 29, 30, 33, 34, 35, 36, 37, 38, 39, 40, 41, 44, 53, 59, 62, 65, 66, 67, 68, 69, 85, n80, n81, n82, n83, n84, n86, n89, n90, n95
VSWR	<1.60, max <2.00
BEAMWIDTH	360°/35° ±5°
POLARIZATION	Vertical
IMPEDANCE	50 Ω

Copyright © 2023, Wireless Instruments. Specifications and information given in this document are subject to change without prior notice.

MECHANICAL SPECIFICATION

MATERIALS	ABS, aluminum, PTFE
CONNECTOR TYPE	Integrated Nf
INGRESS PROTECTION	IP67
DIMENSIONS	160 x 160 x 240 mm 6.3 x 6.3 x 9.45 inch
WEIGHT	1.5 kg 3.31 lbs
OPERATING TEMPERATURE	From -40°C to 80°C From -40°F to 176°F
MAST DIAMETER	40-60 mm 1.57-2.36 inch

FREQUENCY BANDS

LTE / 4G GSM	617 MHz	5	6	8	12	13	14	17	960 MHz
		18	19	20	26	27	28	29	
		44	67	68	85	n81	n82	n83	
		n89							
LTE / 4G UMTS	1710 MHz	1	2	3	4	9	10	25	2170 MHz
		33	34	35	36	37	39	59	
		62	n80	n84	n86	n95			

Copyright © 2023, Wireless Instruments. Specifications and information given in this document are subject to change without prior notice.

LTE / 4G WCS DARS	2300 MHz	30	40					2400 MHz
LTE / 4G	2400 MHz	7	38	41	53	69	n90	2700 MHz

COMPATIBLE ROUTERS

VARIANT: AOLM2-N

TELTONIKA	RUT200, RUT230, RUT240, RUT241, RUT260, RUT900, RUT901, RUT950, RUT951, RUT955, RUT956, RUTX09, RUTX11
DIGI	6310-DX, 6330-MX, EX12, EX15, IX10, IX15, IX20, IX30, WR31, WR44 RR
ROBUSTEL	EG5100, LG5100, R1500, R1510, R1511P, R1520 Global, R1520-4L (S), R1520-4L (V), R2010, R2011, R2110, R3000, R3000 Industrial, R3000 LG, R3000 Lite, R3000 Quad, R3010
ACKSYS	AirBox LTE, AirWan
AIRGAIN	NL-SW-LTE-GELS3, NL-SW-LTE-QBG95, NL-SW-LTE-QBG96, NL-SW-LTE-SRC7611-4, NL-SW-LTE-TC1NAG, NL-SW-LTE-TC1WWG, NL-SW-LTE-TC4NAG, NL-SW-LTE-TC4WWG, NL-SW-LTE-TG1WWG, NL-SWNB-LTE-NRF9160-D
AM TELECOM	AMM545, AMM5500, AMM574, AMM585
ANYBUS	Wireless Router WLAN
COMSET	CM210A-W, CM210Q-W, CM510Q-W, CM685T-W, CM685V-1, CM685V-4, CM685V-6, CM685V-6-G, CM820Q-4, CM820Q-6, CM820T-W, CM820V-4, CM820V-W
CRADLEPOINT	CBA550, E100, E102, IBR200, IBR600C, IBR900, L950, R500, R920, S700
D-LINK	DWR-960, G415 AX1500, G416 AX1500, N300 4G

Copyright © 2023, Wireless Instruments. Specifications and information given in this document are subject to change without prior notice.

DIGI	6310-DX, 6330-MX, EX12, EX15, IX10, IX15, IX20, IX30, WR31, WR44 RR
FIBOCOM	FM101-CG, FM101-EAU, FM101-NA, L610-EU-MiniPCIe, L610-LA-MiniPCIe, L716-CN MiniPCIe, L716-EU-MiniPCIe, NL668-AM MiniPCIe, NL668-EAU-M.2, NL668-EU MiniPCIe, NL668-JP MiniPCIe, NL668-LA MiniPCIe
FORTINET	FEX-101F, FEX-201F, FEX-211E, FEX-212F, FortiGate Rugged 60F-3G4G, FortiGate Rugged 70F-3G4G
FOUR-FAITH	4G Cellular Router F-R100, 4G Industrial Computer F4931-R2H, 4G Industrial Computer F4932-R2H-DF1, Android Industrial Computer F4932-R1Q, Cellular Wireless Router F-R200, Dual Sim 4G Router F3X46, Dual-sim WiFi Router F3946, Industrial WiFi Router F3X36Q, LAN Port Router F3X26 V2, LTE Industrial Router F3X27 V2, LTE Wireless Router F3x36
MIKROTIK	RB912, RB922, RBM11G, RBM33G
MILESIGHT	UR32
OPTION	CloudGate LTE WW CAT4
PEPLINK	Balance 20X, MAX BR1 Classic, MAX BR1 ENT, MAX BR1 IP55, MAX BR1 M2M, MAX BR1 Mini, MAX BR1 Mini (HW3), MAX BR1 Mini Core (HW3), MAX BR1 Mini M2M, MAX BR1 MK2, MAX BR1 Pro, MAX BR1 Slim
PROROUTE	H685 4G Router, H685 LTE 4G CAT6 Router, H820 M2M 4G Router
QUECTEL	LTE-A EM060K-EA, LTE-A EM060K-GL, LTE-A EM061K-GL, LTE-A EM120K-GL, LTE-A EM120R-GL
ROBUSTEL	EG5100, LG5100, R1500, R1510, R1511P, R1520 Global, R1520-4L (S), R1520-4L (V), R2010, R2011, R2110, R3000, R3000 Industrial, R3000 LG, R3000 Lite, R3000 Quad, R3010
SIEMENS	6GK5876-4AA00-2BA2, 6GK5876-4AA00-2DA2, 6GK5876-4AA10-2BA2
SIERRA WIRELESS	AirLink LX40, AirLink LX60, AirLink MP70, AirLink RV50X, AirLink RV55, AirLink RX55, EM7411, EM7421, EM7431, EM7511, EM7565, EM7590, EM7595, EM7690, MC7411, MC7421, MC7431, WP7607, WP7610

Copyright © 2023, Wireless Instruments. Specifications and information given in this document are subject to change without prior notice.

SIMCOM	A7602E-H-M2, A7602E-H-PCIEA, A7608SA-H MiniPCIe, A7906E-M2, SIM7600X-H MiniPCIe, SIM7600X-H-M2, SIM7600X-MiniPCIe, SIM7906A-M2, SIM7906E-M2, SIM7906G-M2, SIM7912A-M2, SIM7912E-M2
TELIT CINTERION	LE910Cx Linux mPCIe Series, LE910Cx ThreadX mPCIe Series, LM940, LN920, mPLS63, mPLS83
TELTONIKA	RUT200, RUT230, RUT240, RUT241, RUT260, RUT900, RUT901, RUT950, RUT951, RUT955, RUT956, RUTX09, RUTX11
WAVETEL	W2400 LTE , W3600 4G/LTE Dual WAN, W3604 Multi-WAN, W3608 Multi-WAN, W421, W4600, W4600-S2
WLINK	ER120, G200, G510, G520, ODU310, R210, R220, R520
ZYXEL	LTE3202-M437, LTE3301-PLUS, LTE5388-M804, LTE5398-M904
OTHER	2 * SMA, 3 * SMA

PLOTS

VSWR

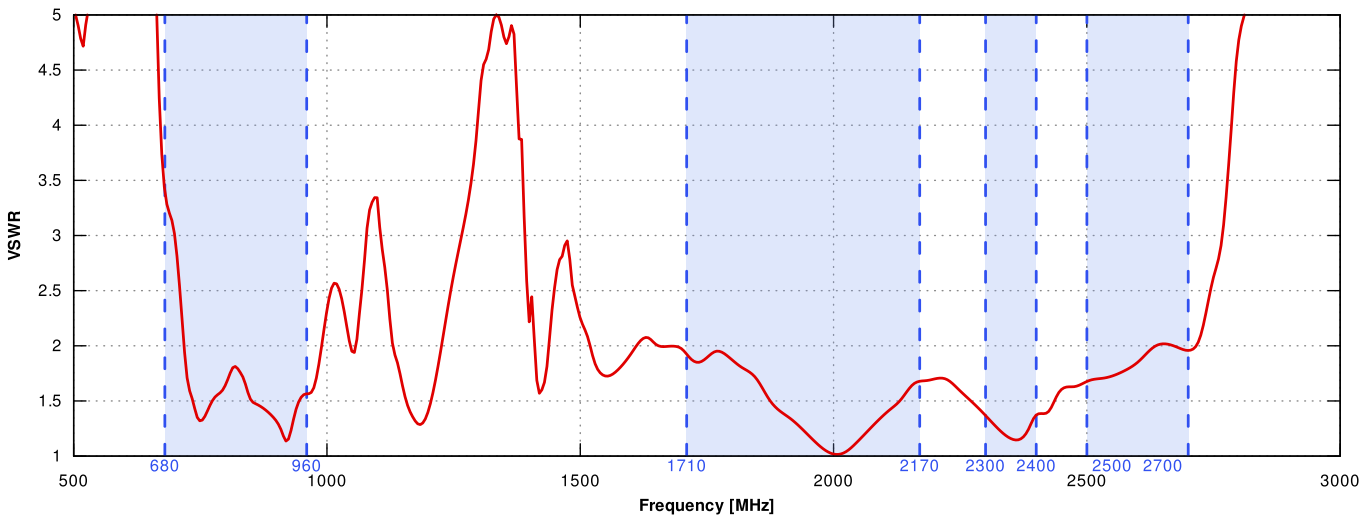

Copyright © 2023, Wireless Instruments. Specifications and information given in this document are subject to change without prior notice.

Gain

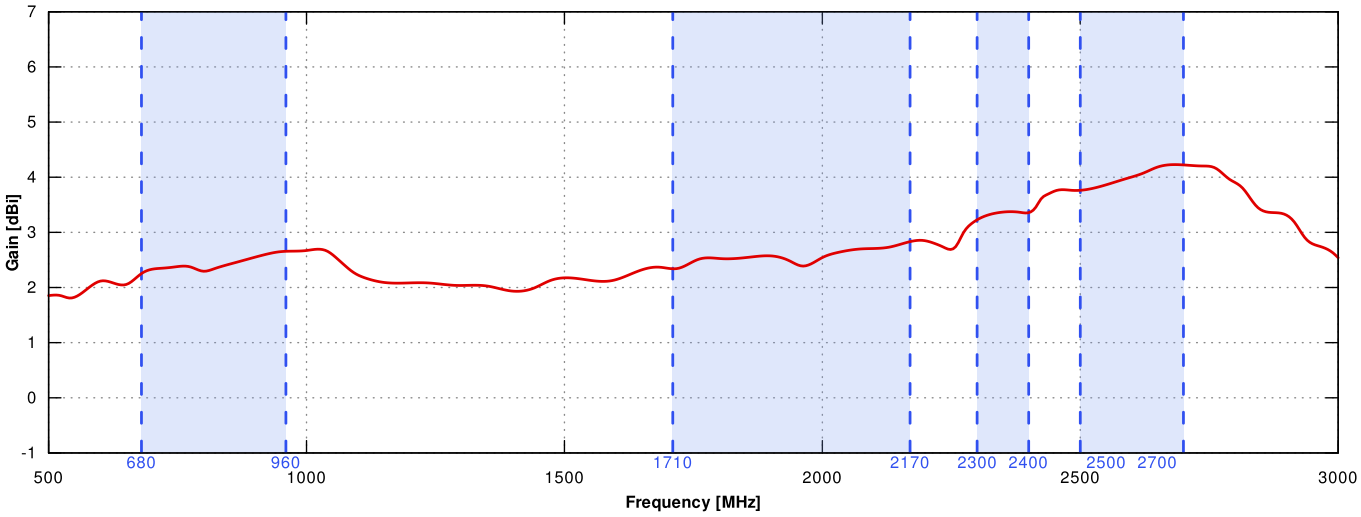

From 700MHz to 900MHz

ELEVATION

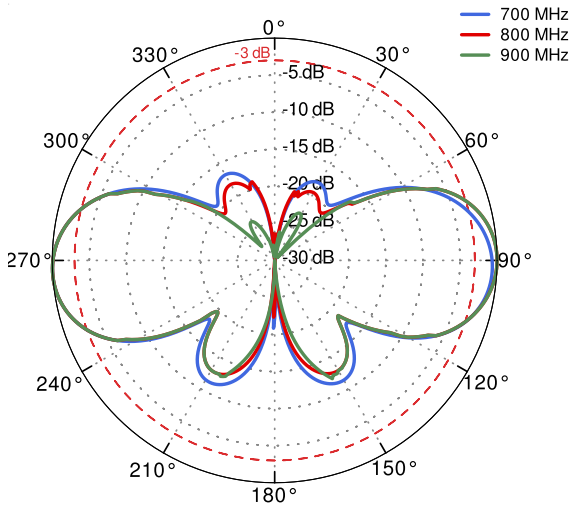

AZIMUTH

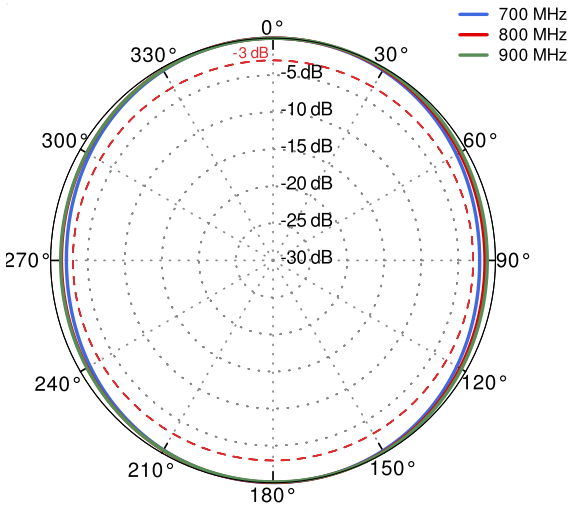

Copyright © 2023, Wireless Instruments. Specifications and information given in this document are subject to change without prior notice.

From 1.71GHz to 2.17GHz

ELEVATION

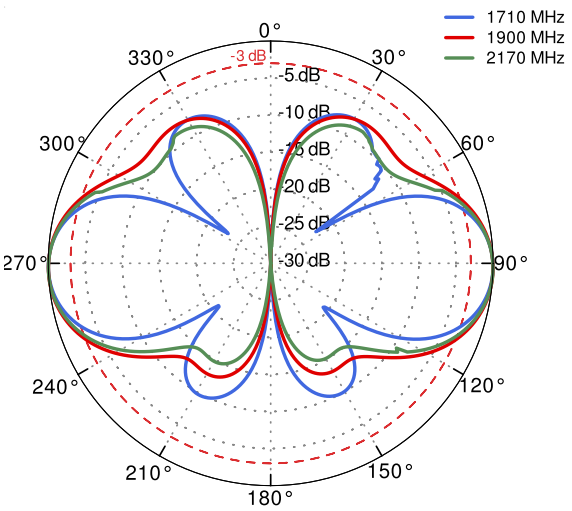

AZIMUTH

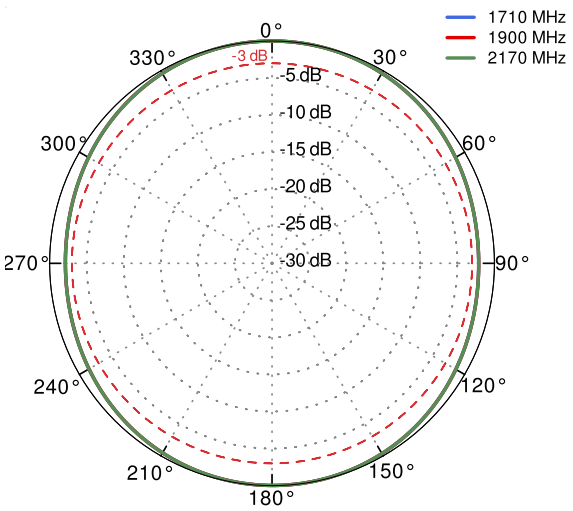

From 2.3GHz to 2.7GHz

ELEVATION

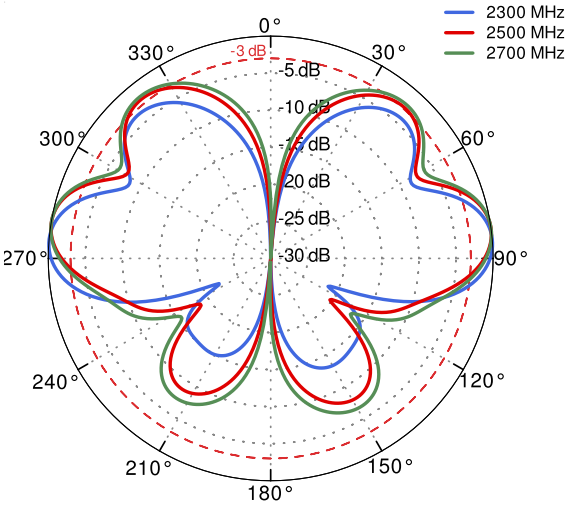

AZIMUTH

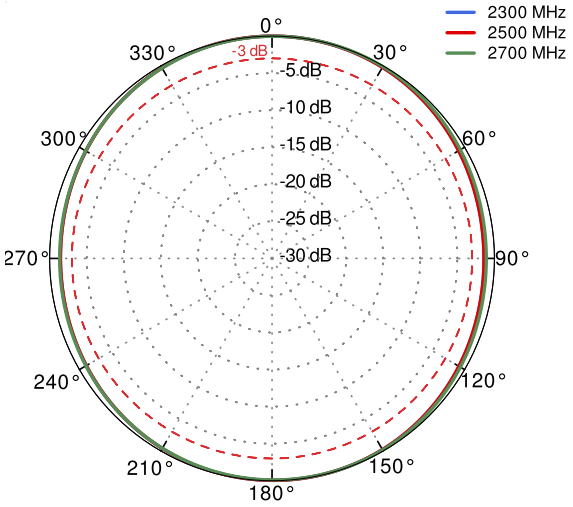

Copyright © 2023, Wireless Instruments. Specifications and information given in this document are subject to change without prior notice.

DIMENSIONS

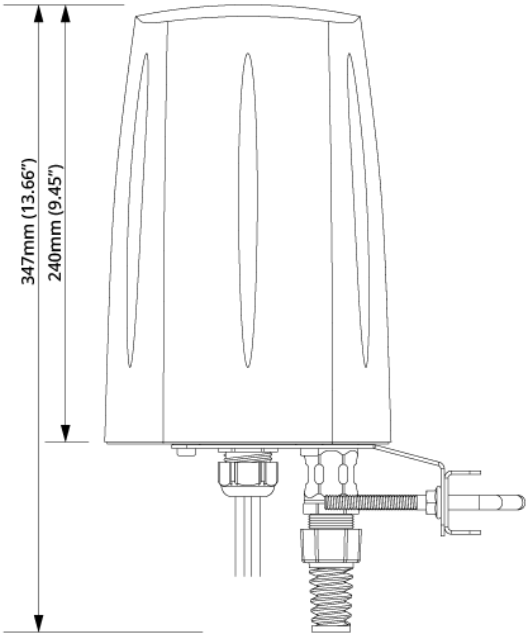

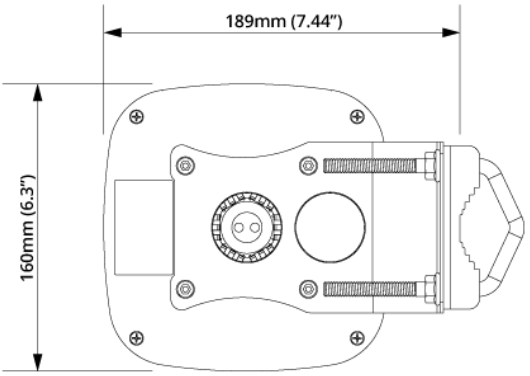

QuWireless
WWW.QUWIRELESS.COM
Sales email: sales@quwireless.com **Tel:** +48 513 900 416
Support email: support@quwireless.com **Website:** www.quwireless.com
Address: Wireless Instruments Sp. z o.o., ul. Kościuszki 27, 52-116 Iwiny, Poland

Copyright © 2023, Wireless Instruments. Specifications and information given in this document are subject to change without prior notice.